3M-Matic™ Random Case Sealers 700r/700r3

Up to 19 different case sizes per minute

Productivity and performance – bringing it all together in two sturdy units for 2" or 3" tape application:

- Consistent top and bottom sealing of random-sized RSCs with automatic adjustment for case heights and widths
- Dual masts with air cylinders for greater stability of taping head
- Top and bottom belts for positive traction and gear motor drive for high volume, heavy duty reliability shift-after-shift with cases up to 85 pounds
- Pneumatic centering station to keep case centered, automatically adjusting for width
- 3M™ AccuGlide™ 3 Taping Head for low impact sealing that protects cases while providing greater throughput
- Emergency stop positioned for quick and easy access
- Rugged construction with 16-gauge welded steel frame and epoxy paint finish

Options shown: Low tape indicator light staff, infeed and exit conveyors, locking casters

Box capacities

Length:	152mm to unlimited
Width*:	152mm to 546mm
Height:	121mm to 622mm
Weight:	3-38 kg

*See back for 700r3 width

Specifications

3M-Matic™ Case Sealer 700r

3M-Matic™ Case Sealer 700r3

700r and 700r3 Footprint

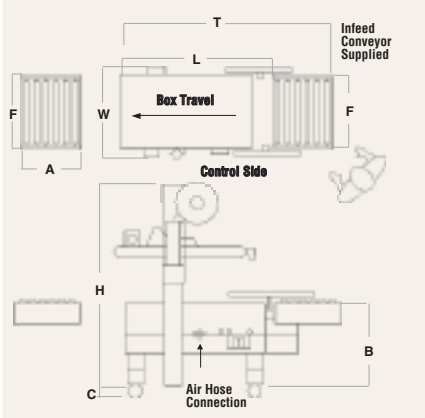

Machine	Tape Size mm	Machine Weight kg	Machine Dimensions Inches (mm)							Electrical	Operating Rate at 70 PSIG 3.75 SCFM	Drive Belt Speed
			W	T	H	A*	B	C***	F			
					Min		Min					
					Max		Max					
					Masts up		Masts up**					
700r	36-50	194.6	787	1640	1346 2184 2290	457	610 889	102	622	400V 50Hz 3.8A 440 watts	Up to 19 per minute depending on box dimensions	30 m/min)
700r3	48-75	199										

* Optional infeed/exit conveyors ** 20 (521) min, 31 (780) max *** Optional casters
Use with clean dry boxes in dry, relatively clean environments at 40°F to 120°F (4.4°C to 48.9°C).

Machine	Box Capacities Inches (mm)				Weight Range Lbs. (kg)
	Length Min Max	Width Min Max	Height Min Max	Height Range w/ Masts Raised	
700r	6 (150) Unlimited	6 (150) 21.5 (123.4)	4.75 (120)* 24.5 (625)	8.0 (203) 28.5 (725)	5 (3) 85 (38)
700r3	6 (150) Unlimited	7 (175) 21.5 (123.4)	4.75 (120) 24.5 (625)	8.0 (203) 28.5 (725)	5 (3) 85 (38)

Note: The 3M-Matic™ Adjustable Case Sealer 700r/r3 can accommodate most boxes within the size range listed here.

However, if:

$$\frac{\text{Box Length in Direction of Seal}}{\text{Box Height}} \text{ is less than .75}$$

Boxes should be test run to ensure proper machine performance.

Contact your 3M representative for special modifications that may be available for sizes not listed.
* 3.75" (90mm) with taping heads adjusted to apply 2" (50mm) tape leg lengths and mast stops relocated.
Note: This technical information and data should be considered representative or typical only and should not be used for specification purposes.

Product Use: User is responsible for determining whether the product is fit for a particular purpose and suitable for user's method of application.

Warranty and Limited Remedy: THE FOLLOWING WARRANTIES ARE MADE IN LIEU OF ALL OTHER WARRANTIES, EXPRESS OR IMPLIED, INCLUDING, BUT NOT LIMITED TO THE IMPLIED WARRANTY OF MERCHANTABILITY, THE IMPLIED WARRANTY OF FITNESS FOR A PARTICULAR PURPOSE AND ANY IMPLIED WARRANTY ARISING OUT OF A COURSE OF DEALING, A CUSTOM OR USAGE OF TRADE: 3M sells its 3M-Matic™ Case Sealers 700r/700r3 with the following warranties: 1) The Taping Head knife blades, springs and rollers will be free from all defects for ninety (90) days after delivery. 2) All other Taping Head parts will be free from all defects for three (3) years after delivery. 3) All other parts will be free from all defects for two (2) years after delivery. Please refer to individual data pages for additional details and exceptions. If any 3M-warrantied part is proved to be defective within its warranty period, then the exclusive remedy and 3M's and seller's sole obligation shall be, at 3M's option, to repair or replace the part, provided the defective part is returned immediately to 3M's factory or an authorized service station designated by 3M. A part will be presumed to have become defective after its warranty period unless the part is received or 3M is notified of the problem no later than five (5) calendar days after the warranty period. If 3M is unable to repair or replace the part within a reasonable time, then 3M, at its option, will replace the equipment or refund the purchase price. 3M shall have no obligation to provide or pay for the labor required to install the repaired or replacement part. 3M shall have no obligation to repair or replace (1) those parts failing due to operator misuse, carelessness, or due to any accidental cause other than equipment failure, or (2) parts failing due to non-lubrication, inadequate cleaning, improper operating environment, improper utilities or operator error. **Limitation of Liability:** 3M and seller shall not be liable for direct, indirect, special, incidental or consequential damages based upon breach of warranty, breach of contract, negligence, strict liability or any other legal theory. The foregoing Warranty and Limited Remedy and Limitation of Liability may be changed only by a written agreement signed by authorized officers of 3M and seller.

3M

Industrial Adhesives and Tapes Division

Bldg. 21-1W-10
900 Bush Ave.
St. Paul, MN 55106
1-800-362-3550
www.3M.com/packaging

Idépack Verpakkingsmachines BV
Zeilmaker 8
NL-3861 SM Nijkerk
THE NETHERLANDS
Tel. +31(0)33 299 00 08
www.idepack.com
info@idepack.com

3M, 3M-Matic and AccuGlide are trademarks of 3M Company.

Scotch® is a registered trademark of 3M Company.

Printed in U.S.A.
© 3M 2008
70-0710-0379-5

3M-Matic™ Top and Bottom Drive Belt Random King Size Case Sealer 700rks

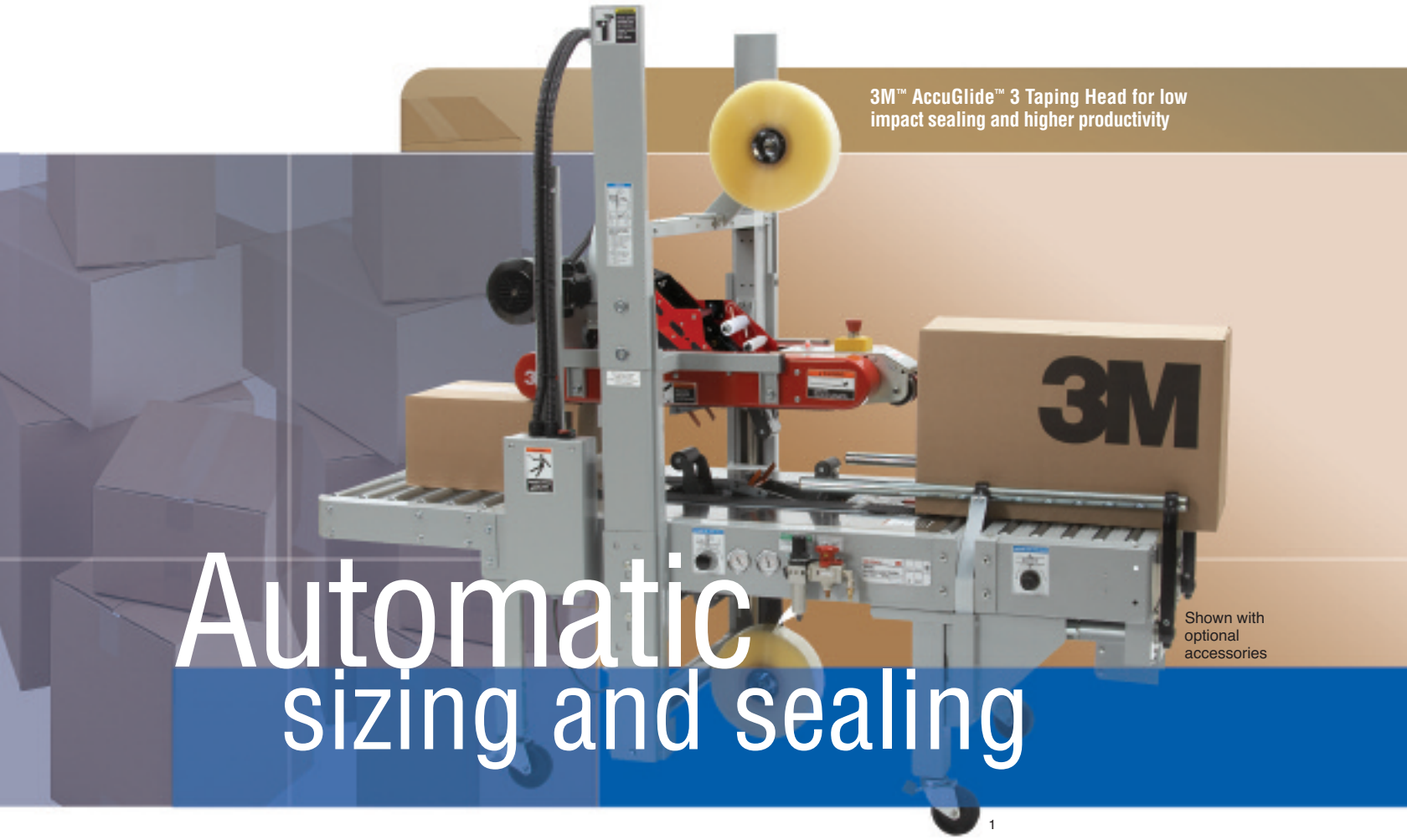

Automatic sizing and sealing

Up to 19 different large case sizes per minute

For large RSCs used in the appliance, furniture, and other industries, 3M-Matic™ Top and Bottom Drive Belt Random King Size Case Sealer 700rks automatically adjusts height and width to accurately seal top and bottom flaps at up to 19 cases per minute. Top and bottom drive belts help assure consistent traction for long runs.

Features include:

- Dual masts for taping head stability
- Dual gear motor drives for dependability with cases up to 85 pounds (38 kg)
- Pneumatic packing station holds empty cases for filling and automatically centers them for accurate sealing
- Centrally-located emergency stop for quick and easy access
- Designed for use with 48-72mm (2"-3") Scotch® Box Sealing Tapes

Options: Locking casters, exit conveyor, and low tape indicator

Box capacities

Length:	6" to no limit (152mm to no limit)
Width:	7" to 25.5" (178mm to 648mm)
Height:	4.75" to 35.8" (121mm to 909mm) See chart on back for selecting height ranges
Weight:	5-85 lbs. (3-38 kg)

3M

Specifications

3M-Matic™ Top and Bottom Drive Belt Random Case Sealer 700rks

2

700rks Footprint

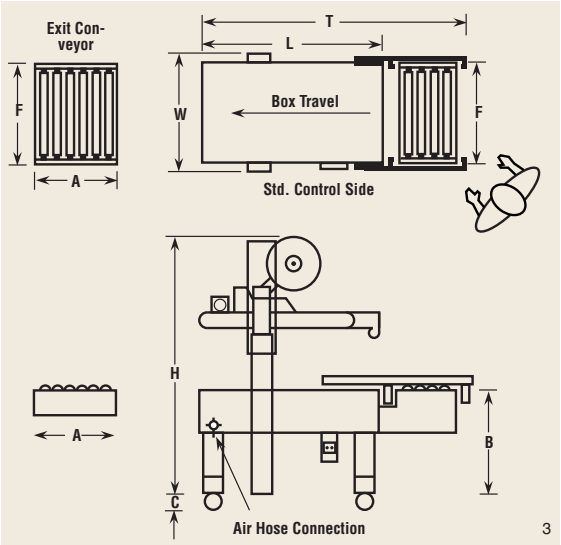

3

Machine	Tape Size Inches (mm)	Machine Weight* Lbs. (kg)	Machine Dimensions Inches (mm)							Electrical	Operating Rate at 85 PSIG 2.5 SCFM	Drive Belt Speed
			W	L	H	A	B	C**	F			
					Min.		Min.					
					Max.		Max.					
700rks	2-3 (48-72)	430 (194)	33.75 (857)	42.5 (1080)	49.5 (1257) 91.5 (2324)	17 (432)	20.5 (521) 31 (787)	4.75 (121)	29 (737)	115V 60Hz, 5.8A,675 watts 8' power cord	Up to 19 per minute	100 fpm (0.5 m/s)

*Uncrated **Optional casters T= 60.25 (1530) Use with clean dry boxes in dry, relatively clean environments at 40°F to 120°F (4.4°C to 48.9°C).

Height Ranges:				
Crossbar Position	Mast Position			
	Standard		High	
	Min.	Max.	Min.	Max.
High	10.875" (276mm)	31.625" (803mm)	15.225" (387mm)	35.875" (911mm)
Middle	6.875" (175mm)	27.625" (702mm)	11.125" (283mm)	31.875" (810mm)
Low Standard	4.75" (121mm)*	25.5" (648mm)	9" (229mm)	29.75" (756mm)

*For heights below 4.75" (121mm) taping heads must be adjusted to apply 2.22" (50mm) tape leg lengths.

Machine	Box Capacities Inches (mm)			Weight Range Lbs. (kg)
	Length Min. Max.	Width Min. Max.	Height Min. Max.	
700rks	6" to no limit (152mm to no limit)	7" to 25.5" (178mm to 648mm)	4.75" to 35.8" (121mm to 909mm)	5-85 lbs. (3-38 kg)

Contact your 3M representative for special modifications that may be available for sizes not listed.

Note: The 3M-Matic™ Top and Bottom Drive Belt Random Case Sealer 700rks can accommodate most boxes within the size range listed here.

However, if:

Box Length in Direction of Seal / Box Height is less than .75

Boxes should be test run to ensure proper machine performance.

4

Note: This technical information and data should be considered representative or typical only and should not be used for specification purposes.

Product Use: User is responsible for determining whether the product is fit for a particular purpose and suitable for user's method of application.

Warranty and Limited Remedy: THE FOLLOWING WARRANTIES ARE MADE IN LIEU OF ALL OTHER WARRANTIES, EXPRESS OR IMPLIED, INCLUDING, BUT NOT LIMITED TO THE IMPLIED WARRANTY OF MERCHANTABILITY, THE IMPLIED WARRANTY OF FITNESS FOR A PARTICULAR PURPOSE AND ANY IMPLIED WARRANTY ARISING OUT OF A COURSE OF DEALING, A CUSTOM OR USAGE OF TRADE: 3M sells its 3M-Matic™ Case Sealer 700rks with the following warranties: 1) The Taping Head knife blades, springs and rollers will be free from all defects for ninety (90) days after delivery. 2) All other Taping Head parts will be free from all defects for three (3) years after delivery. 3) All other parts will be free from all defects for two (2) years after delivery. Please refer to individual data pages for additional details and exceptions. If any 3M-warrantied part is proved to be defective within its warranty period, then the exclusive remedy and 3M's and seller's sole obligation shall be, at 3M's option, to repair or replace the part, provided the defective part is returned immediately to 3M's factory or an authorized service station designated by 3M. A part will be presumed to have become defective after its warranty period unless the part is received or 3M is notified of the problem no later than five (5) calendar days after the warranty period. If 3M is unable to repair or replace the part within a reasonable time, then 3M, at its option, will replace the equipment or refund the purchase price. 3M shall have no obligation to provide or pay for the labor required to install the repaired or replacement part. 3M shall have no obligation to repair or replace (1) those parts failing due to operator misuse, carelessness, or due to any accidental cause other than equipment failure, or (2) parts failing due to non-lubrication, inadequate cleaning, improper operating environment, improper utilities or operator error. **Limitation of Liability:** 3M and seller shall not be liable for direct, indirect, special, incidental or consequential damages based upon breach of warranty, breach of contract, negligence, strict liability or any other legal theory. The foregoing Warranty and Limited Remedy and Limitation of Liability may be changed only by a written agreement signed by authorized officers of 3M and seller.

3M

Industrial Adhesives and Tapes Division

Bldg. 21-1W-10
900 Bush Ave.
St. Paul, MN 55106
1-800-362-3550
www.3M.com/packaging

Idépack Verpakkingsmachines BV
Zeilmaker 8
NL-3861 SM Nijkerk
THE NETHERLANDS
Tel. +31(0)33 299 00 08
www.idepack.com
info@idepack.com

3M, 3M-Matic and AccuGlide are trademarks of 3M Company.

Scotch® is a registered trademark of 3M Company.

Printed in U.S.A.
© 3M 2008
70-0710-0377-9